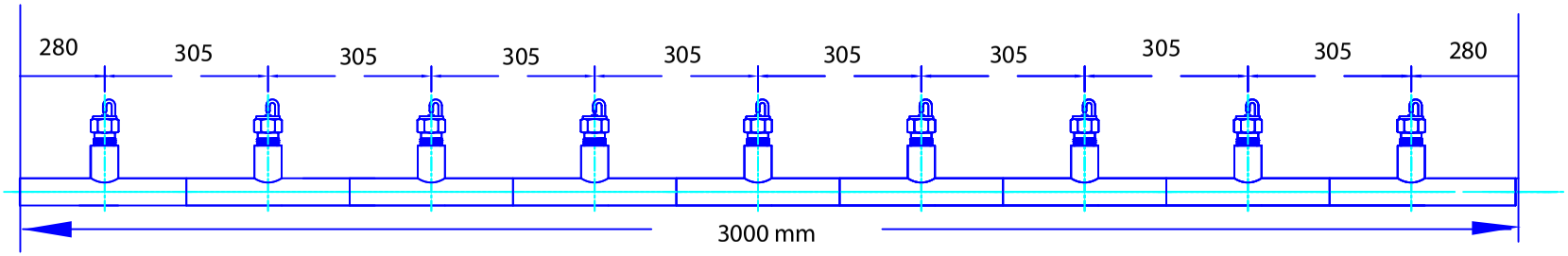

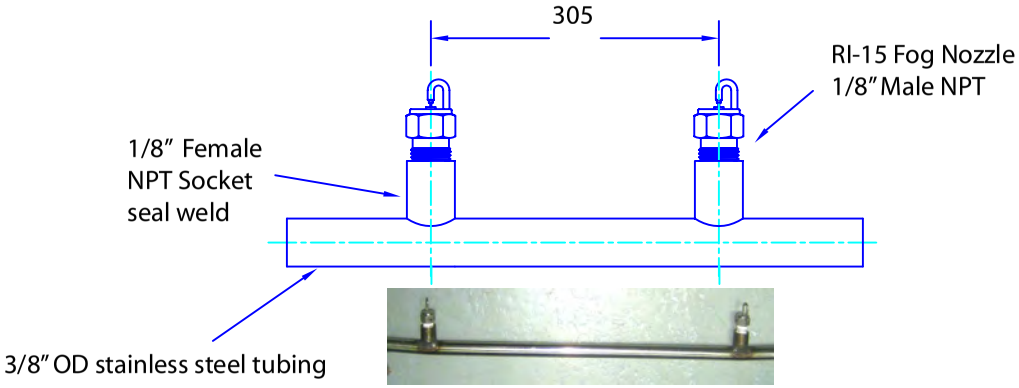

WELDED SADDLE W/NOZZLE

Stainless steel only/On any centers

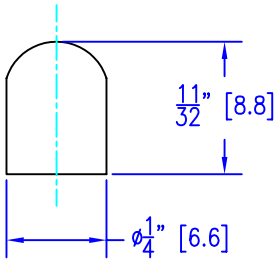

FILTER

SIZE X 4

NOZZLE W/FILTER

SCALE: SIZE X 4

FILTER, 5-micron
Polypropylene
Designed for finger-tip removal.

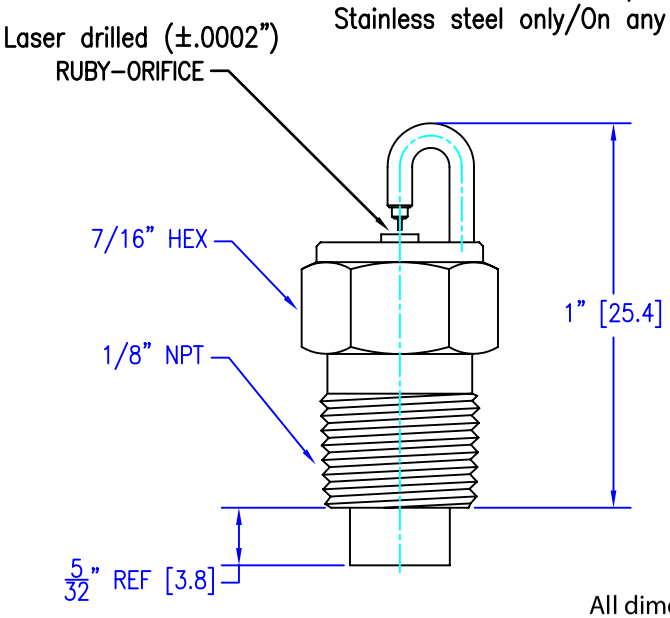

All dimension in mm.

Nozzle Capacity Chart based on Water

Nozzle Number	Orifice (inch)	Flow Rate in GPM at PSI 400	800	1000	1200	1500	2000	Orifice (mm)	Flow Rate in LPM at BAR 40	60	70	80	100	140
RI - 10	.004	.008	.012	.014	.015	.017	.019	.10	.030	.045	.051	.056	.064	.072
RI -15	.006	.016	.023	.026	.028	.032	.037	.15	.072	.089	.097	.106	.119	.140
RI-20 Serie 8	.008	.029	.041	.046	.050	.056	.065	.20	.127	.161	.174	.188	.210	.248

UNLESS OTHERWISE SPECIFIED:
DIMENSIONS ARE IN INCHES
TOLERANCES
FRACTIONS ± 1/16 DECIMALS .XX ±.03 .XXX ±.010 ANGULAR ± 1°
INTERPRET PER ASME Y14.5M
DO NOT SCALE DRAWING IF NOT SPECIFIED

MATERIAL: Stainless Steel

FINISH: 125

www.wilsonspraynozzle.sg
E-mail : sales@wisonspraynozzle.sg
Tel :67741828, Fax :67779813

WILSON SPRAY NOZZLE PTE LTD
Blk 51 #05-10/11 Ayer Rajah Crescent, Ayer Rajah Industrial Estate,
Singapore 139948.

TITLE: RUBY INSERT FOG NOZZLES

SIZE	DRAWN	DATE	DWG NO.	REV.
B	VN	1st Feb 09	784951	0
	CHECKED: JET	DATE: 28th Feb 09	For:	

SCALE	FILE NAME:	JOB NO.	SHEET	OF
1:2			1	1